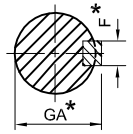

SECTION A–A

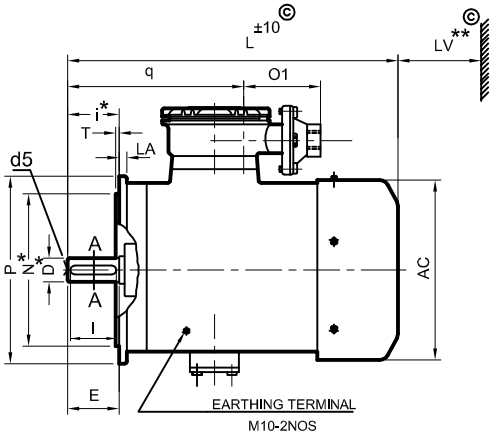

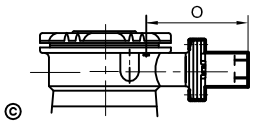

TERMINAL BOX ARRANGEMENT
WITH SEALING BOX

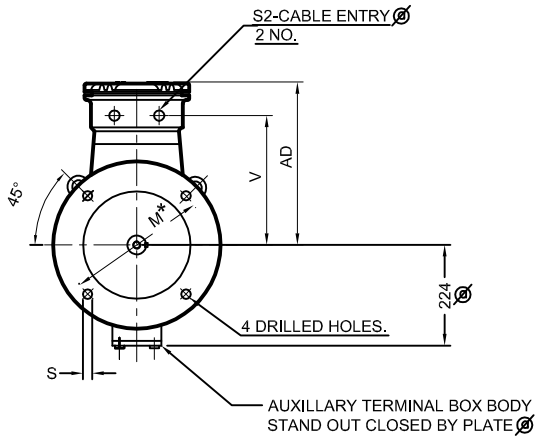

			FIXING					GENERAL						TERMINAL BOX						SHAFT				
IEC Fr. size	BBL Fr. size	Pole	P	N*	M*	i*	S	T	LA	AC	L	LV**	AD	V	O	O1	q	S2 Ø	D*	E	F*	GA*	I	d5
200L	MJ200	2	400	300	350	110	19	5	15	394	Ø 826	80	356	288	237	133	416	M40X1.5P	55	110	16	59	100	M20

©

MAIN T.BOX
CABLE SIZE :– 2RX3CX70mmsq.
FOR AYFY ARMOURED CABLE 650V

OVERALL DIMENSIONAL DRAWING
FLAME PROOF (FLANGE MOUNTED) MOTOR
FR.SIZE–200L

Tolerance on Dimensions with *

Dimension	Tolerance	Specification
N	j6	IS : 2223
M	±0.5	
i	±1	

Dimension	Tolerance	Specification
D	m6	IS : 1231
GA,F		IS : 2048
d5(centering)		IS : 2540

NO. OFF	DESCRIPTION	ITEM NO.	CODE NO.	MATL.	DRG.NO.	PATTERN NO. OR SIZE	WT. kg

AMEND-MENT
ⓐ CABLE ENTRY CHANGED AS PER IS/IEC 60079-1-2007 AND ADDITION OF AUX. T.B BODY STAND OUT R.B.K 18.02.12
ⓑ AMENDED FOR OVER ALL LENTH --- P.K.A -- 01-09-2012
ⓒ REVISED FOR TIF --SPK-- 04.02.13.

	DATE	NAME	APRD.
DRN.	31.12.09	V.K.S.	K.M.A
TCD.			
CHD.	31.12.09	P.S.A	

TITLE: B5
W/O.NO.
SCALE: /

BHARAT BIJLEE LTD.
KALWA

DRG.No. D20L251TC Ø Ø ©
REF.
FR.SIZE: MJ200
TYPE

ALL DIMEMSIONS ARE IN mm. UNLESS OTHERWISE SPECIFIED.