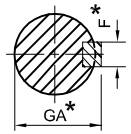

SECTION A–A

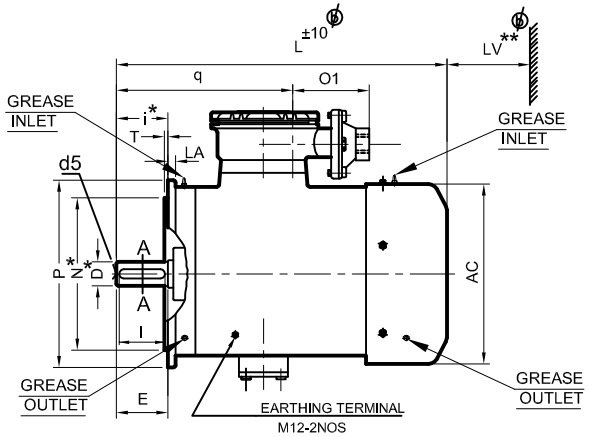

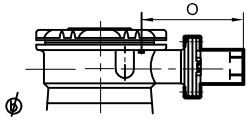

TERMINAL BOX ARRANGEMENT
WITH SEALING BOX

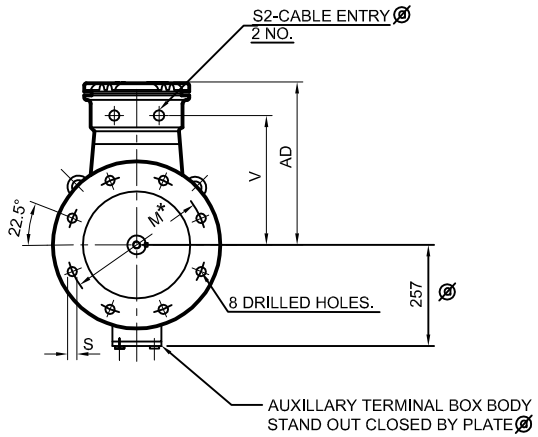

			FIXING					GENERAL						TERMINAL BOX					SHAFT					
IEC Fr. size	BBL Fr. size	Pole	P	N*	M*	i*	S	T	LA	AC	L	LV**	AD	V	O	O1	q	S2	D*	E	F*	GA*	I	d5
225M	MJ225	4,6	450	350	400	140	19	5	16	444	836	90	426	339	308	264	444	M50X1.5P	60	140	18	64	130	M20
											©													

MAIN T.BOX
CABLE SIZE :– 2RX3CX150mmsq.
FOR AYFY ARMOURED CABLE 650V

OVERALL DIMENSIONAL DRAWING
FLAME PROOF (FLANGE MOUNTED) MOTOR
FR.SIZE–225M

Tolerance on Dimensions with *

Dimension	Tolerance	Specification
N	j6	IS : 2223
M	±0.5	
i	±1.5	

Dimension	Tolerance	Specification
D	m6	IS : 1231
GA,F		IS : 2048
d5(centering)		IS : 2540

NO. OFF	DESCRIPTION	ITEM NO.	CODE NO.	MATL.	DRG.NO.	PATTERN NO. OR SIZE	WT. kg

AMEND-MENT
ⓐ CABLE ENTRY CHANGED AS PER IS/IEC 60079-1-2007 R.B.K 18.02.12
ⓑ REVISED FOR TIF --SPK-- 04.02.13.
ⓒ TOTAL LENGTH REVISED--RBK--08.06.15

	DATE	NAME	APRD.
DRN.	01.01.10	V.K.S.	K.M.A
TCD.			
CHD.	01.01.10	P.S.A	

TITLE: B5
W/O.NO.
SCALE

BHARAT BIJLEE LTD.
KALWA

DRG.No. D22M451TC ⓐⓑⓒ
REF.
FR.SIZE MJ225
TYPE

ALL DIMEMSIONS ARE IN mm. UNLESS OTHERWISE SPECIFIED.