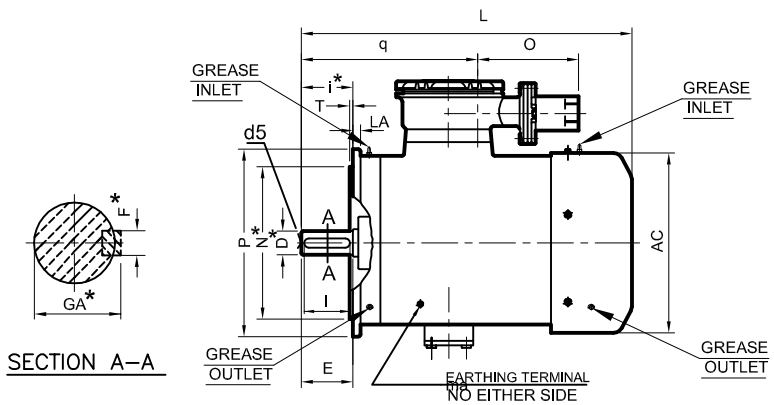

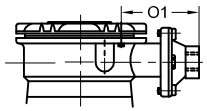

TERMINAL BOX ARRANGEMENT WITHOUT SEALING BOX

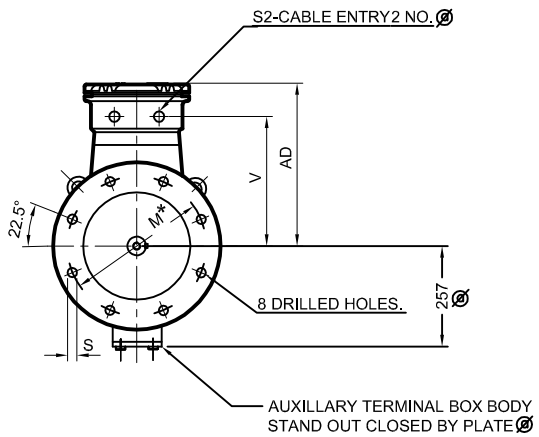

			FIXING					GENERAL					TERMINAL BOX						SHAFT					
IEC Fr. size	BBL Fr. size	Pole	P	N*	M*	i*	S	T	LA	AC	L	AD	V	O	O1	q	S2ⓐ	D*	E	F*	GA*	I	d5
225S	MJ225	4,6 & 8	450	350	400	140	19	5	16	444	836	426	339	308	264	444	M50X1.5P	60	140	18	64	130	M20

ⓑ

TYPE REFERENCE:– .....
MOTOR RATING:– .....KW .....P

* MAIN T.BOX
CABLE SIZE:– 2RX3CX150mmsq CUSTOMER TO CONFIRM.ⓐ
FOR AYFY ARMORED CABLE, 650V/1100V

OVERALL DIMENSIONAL DRAWING
FLAME PROOF (FLANGE MOUNTED) EFF2 MOTOR
FR.SIZE–225S

Tolerance on Dimensions with *

Dimension	Tolerance	Specification
N	j6	IS : 2223
M	±0.5	
i	±1.5	

Dimension	Tolerance	Specification
D	m6	IS : 1231
GA,F		IS : 2048
d5(centering)		IS : 2540

NO. OFF	DESCRIPTION	ITEM NO.	CODE NO.	MATL.	DRG.NO.	PATTERN NO. OR SIZE	WT. kg

AMEND-MENT
ⓐ CABLE ENTRY CHANGED AS PER IS/IEC 60079–1–2007 R.B.K 20.02.12
ⓑ REVISED FOR TIF ––SBM–– 07.02.17

	DATE	NAME	APRD.
DRN.	01.01.10	V.K.S.	K.M.A
TCD.			
CHD.	01.01.10	P.S.A	

TITLE: B5
W/O.NO.
SCALE

BHARAT BIJLEE LTD.
KALWA

DRG.No. D22S452TCⓐⓑ
FR.SIZE MD225S
REF.
TYPE

ALL DIMEMSIONS ARE IN mm. UNLESS OTHERWISE SPECIFIED.