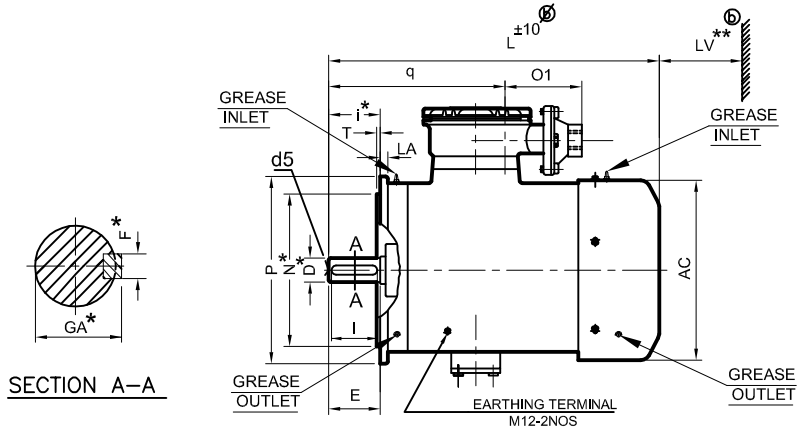

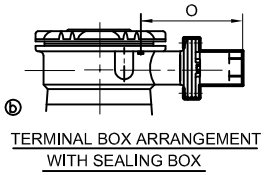

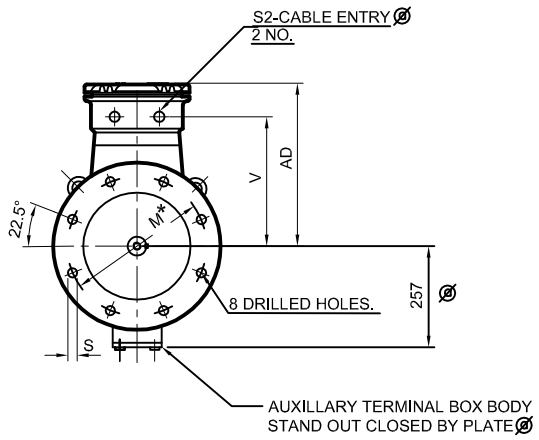

			FIXING					GENERAL						TERMINAL BOX						SHAFT					
IEC Fr. size	BBL Fr. size	Pole	P	N*	M*	i*	S	T	LA	AC	L	LV**	AD	V	O	O1	q	S2 ⌀	D*	E	F*	GA*	I	d5
225M	MJ225	2	450	350	400	110	19	5	16	444	824 ⓒ	90 ⌀	426	339	308	264	414	M50X1.5P	55	110	16	59	100	M20

MAIN T.BOX
CABLE SIZE :– 2RX3CX150mmsq.
FOR AYFY ARMOURED CABLE 650V

OVERALL DIMENSIONAL DRAWING
FLAME PROOF (FLANGE MOUNTED) MOTOR
FR.SIZE–225M

Tolerance on Dimensions with *

Dimension	Tolerance	Specification
N	j6	IS : 2223
M	±0.5	
i	±1	

Dimension	Tolerance	Specification
D	m6	IS : 1231
GA,F		IS : 2048
d5(centering)		IS : 2540

NO. OFF	DESCRIPTION	ITEM NO.	CODE NO.	MATL.	DRG.NO.	PATTERN NO. OR SIZE	WT. kg

AMEND-MENT
ⓐCABLE ENTRY CHANGED AS PER IS/IEC 60079–1–2007 AND ADDITION OF AUX. T.B BODY STAND OUT R.B.K 18.02.12
ⓑREVISED FOR TIF ––SPK–– 04.02.13.
ⓒREVISED FOR TIF ––SBM–– 07.02.17

	DATE	NAME	APRD.
DRN.	01.01.10	V.K.S.	K.M.A
TCD.			
CHD.	01.01.10	P.S.A	

TITLE: B5
W/O.NO.
SCALE

BHARAT BIJLEE LTD.
KALWA

DRG.No. D22M251TC ©
REF.
FR.SIZE MJ225
TYPE

ALL DIMEMSIONS ARE IN mm. UNLESS OTHERWISE SPECIFIED.